ENCORE COMBUSTION

Purge Reduction Seals (Velocity & Molecular Seals)

GENERAL:

- Designed to prevent flashback by minimizing air ingress from the top of the flare
- Velocity purge seal mounted in base of flare tip and uses the velocity of the purge gas through the seal to sweep any atmospheric air in the flare tip
- Molecular seal creates a labyrinth to more efficiently sweep any atmospheric air in the flare tip
- Velocity seal reduces purge gas requirement by 94%
- Molecular seal reduces purge gas requirement by 98%
- Effective purge gas includes any gas that does not include oxygen and will not reach dew point at ambient conditions

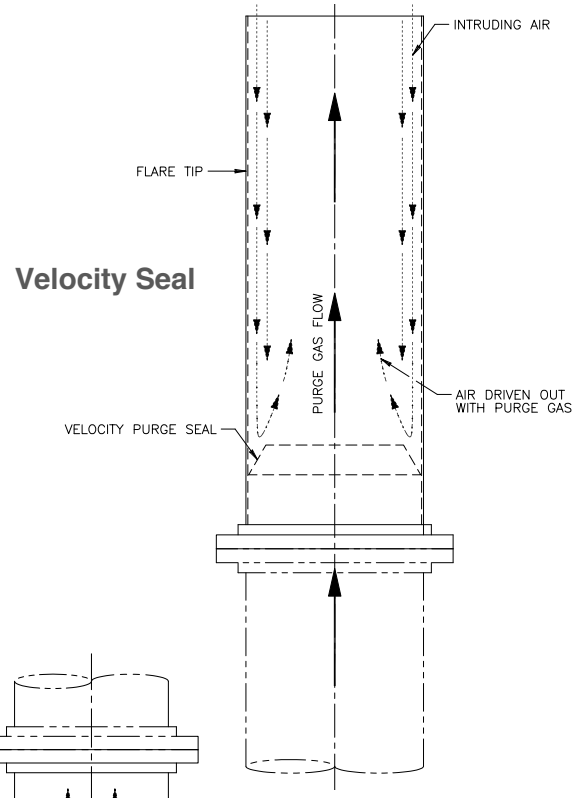

Velocity Seal

SELECTION CRITERIA / ADVANTAGES

- Velocity seal - lowest capital cost
- Molecular seal - lowest operating costs
- Molecular seal recommended for flare tips 24” and larger

DESIGN FEATURES

- Molecular seal can maintain an effective seal for up to 8 hours after loss of purge gas supply
- Velocity seal provided with weep holes to allow drainage
- Molecular seal complete with drain connection & inspection port
- Both seals provide significant savings in operating costs
- Extends flare tip life by minimizing burn back
- No moving parts
- Velocity seal standard on all Encore Combustion flare tips

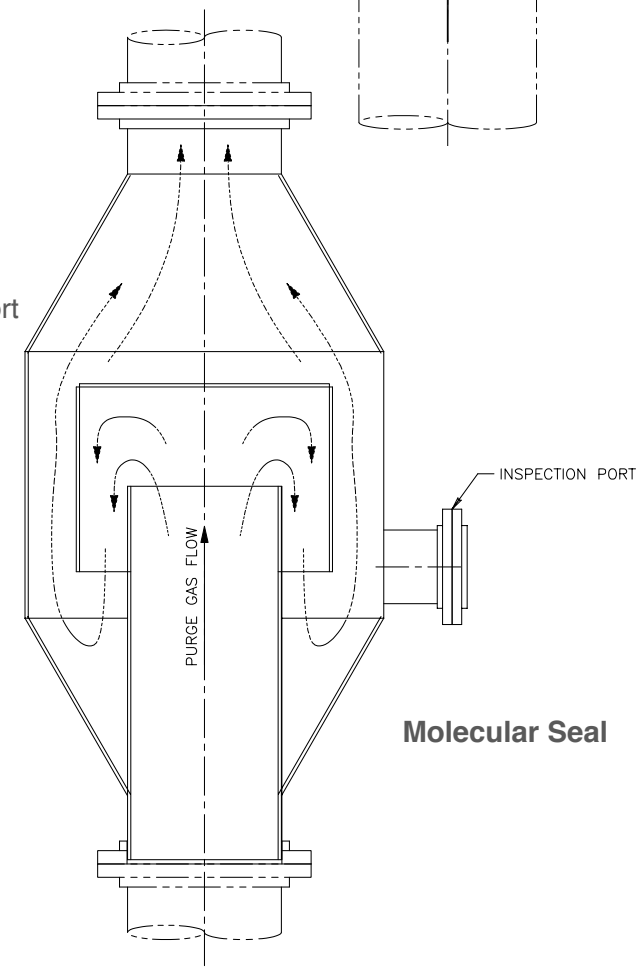

Molecular Seal

SPECIFICATIONS

DIMENSIONS:

- Diameter: 24” - 144” + [610 - 3658 mm +]

STANDARD MATERIALS:

- Velocity Seal: 304SS
- Molecular Seal: carbon steel or stainless steel

Tel: +1(512)580-6603 sales@encorecombustion.com www.encorecombustion.com